CERTIFICATE OF SURVEY

"BOUNDARY LINE ADJUSTMENT"

SE1/4 SW1/4, SW1/4 SE1/4, SECTION 2,
NE1/4 NW1/4, NW1/4 NE1/4, SECTION 11, T.36N., R.27W., P.M.,MT.
LINCOLN COUNTY, MONTANA
FOR: TERRY WEBB DATE: JUNE 2008

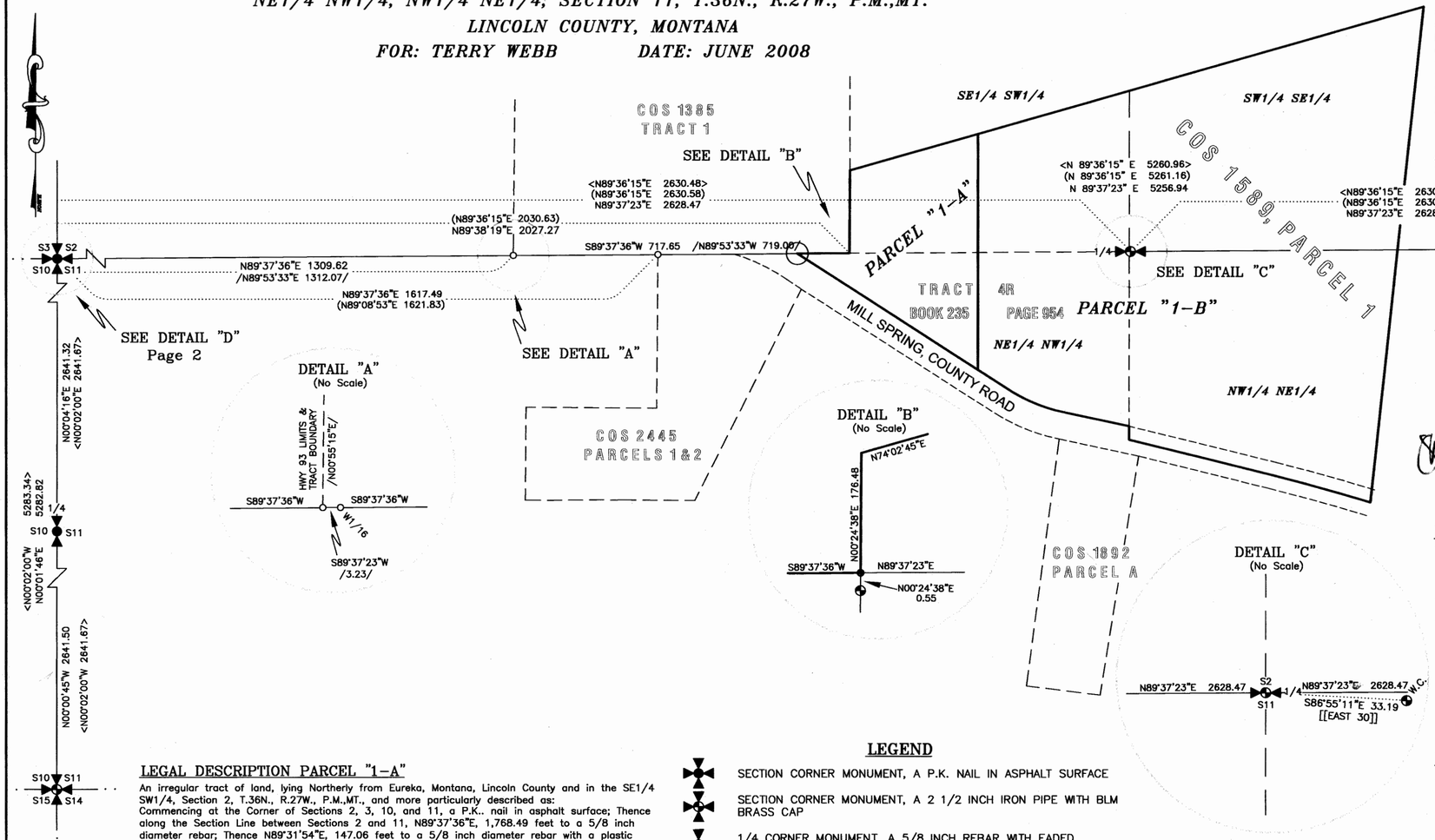

PURPOSE OF SURVEY AND OWNER'S EXEMPTION CERTIFICATION

I, Terry J. Webb, being the record owner, hereby certify that the purpose of this survey and division of land is the relocation of common boundaries and is therefore exempt from subdivision review pursuant to MCA 76-3-207(1)(a): "divisions made outside of a platted subdivision for the purpose of relocating common boundary lines between adjoining properties". I further certify that Parcel "1-B" is exempt from review by the Department of Environmental Quality pursuant to ARM 17.36.605 Exclusions 2(b)(i)(ii): "as a parcel that has no existing facilities for water supply, wastewater disposal, and solid waste disposal other than those that were previously approved by the reviewing authority under Title 76, chapter 4, part 1, M.C.A. or that were exempt from such review because no new facilities will be constructed on the parcel and the division of land will not cause approved facilities to violated any conditions of of approval, and will not cause exempt facilities to violate any condition of exemption".

Terry J. Webb — Date: 10-15-09

ACKNOWLEDGMENT

The foregoing Exemptions were subscribed and acknowledged before me a Notary Public for the State of Montana County of LINCOLN, by the above named person(s), on this 15 day of October 2009. In witness whereof, I have hereunto set my hand and affixed my notorial seal.

Notary Public for the State of MT residing in: EUREKA My Commission expires: 9-7-2011

HISTORY OF SURVEY

1975 – COS No. 110, Adjoining Parcel and Section Subdivision, Sorenson, 2345ES
1982 – Certified Corner Recordation, Book 1, Page 1535 of Quarter Corner between sections 2 and 11 Marquardt, 2989ES
1985 – COS No. 1385, Adjoining Parcel, Doyle, 2516S
1987 – COS No. 1589, Creates "Parcel 1", Burton, 5428S
1994 – COS No. 1892, Adjoining Parcel, McAlister, 7328S
1996 – COS No. 2445, Adjoining Parcel, Larsen, 9250ES
1999 – COS No. 2823, Adjoining Parcel, Burton, 5428S
2006 – Amended Plat No. 6743, Adjoining Parcel, Belski, 14731LS

LEGAL DESCRIPTION PARCEL "1-A"

An irregular tract of land, lying Northerly from Eureka, Montana, Lincoln County and in the SE1/4 SW1/4, Section 2, T.36N., R.27W., P.M.,MT., and more particularly described as:
Commencing at the Corner of Sections 2, 3, 10, and 11, a P.K.. nail in asphalt surface; Thence along the Section Line between Sections 2 and 11, N89°37'36"E, 1,768.49 feet to a 5/8 inch diameter rebar; Thence N89°31'54"E, 147.06 feet to a 5/8 inch diameter rebar with a plastic cap marked Doyle 2516S; Thence N89°41'22"E, 111.73 feet to a set 5/8 inch diameter rebar with a plastic cap marked Hughes 7322LS and the TRUE POINT BEGINNING:
Thence N00°24'38"E, 176.48 feet to a 5/8 inch diameter bent uncapped rebar; Thence N74°02'45"E, 241.85 feet to a set 5/8 inch diameter rebar with plastic cap marked Hughes 7322LS; Thence S00°04'18"W, 241.42 feet to said Section Line, a set 5/8 inch diameter rebar with plastic cap marked Hughes 7322LS; Thence S00°04'18"W, 222.90 feet to the northerly Right-of-Way limits of "Mill Spring Road", a 5/8 inch diameter rebar with plastic cap marked HUGHES 7322LS; Thence along said limits N57°22'52"W, 548.66 feet to a 5/8 inch diameter rebar with plastic cap marked Doyle 2516S; Thence leaving said limits N89°41'22"E, 111.73 feet to a set 5/8 inch diameter rebar marked Hughes 7322LS and the TRUE POINT OF BEGINNING, containing 2.000 acres, Subject to and together with appurtenant easements of record.

LEGEND

- SECTION CORNER MONUMENT, A P.K. NAIL IN ASPHALT SURFACE
- SECTION CORNER MONUMENT, A 2 1/2 INCH IRON PIPE WITH BLM BRASS CAP
- 1/4 CORNER MONUMENT, A 5/8 INCH REBAR WITH FADED PLASTIC CAP, INDISCERNIBLE MARKINGS
- 1/4 CORNER MONUMENT, SET 5/8 INCH DIAMETER REBAR WITH A PLASTIC CAP MARKED HUGHES 7322LS, BURIED 2 FEET UNDER A PLOW FIELD SURFACE
- A 5/8 INCH DIAMETER REBAR
- SET 5/8 INCH DIAMETER REBAR WITH A PLASTIC CAP MARKED HUGHES 7322LS
- UNMARKED COMPUTED POINT

LEGEND

- < > COS No. 110-RECORD
- / / COS No. 1385-RECORD
- ( ) COS No. 1589-RECORD
- [[ ]] CERTIFIED CORNER RECORDATION BOOK 1, PAGE 1535
- BOUNDARY LINES THIS SURVEY
- ADJOINING BOUNDARY LINES
- SECTION LINE
- SUBDIVISION LINE

LEGAL DESCRIPTION PARCEL "1-B"

An irregular tract of land, lying Northerly from Eureka, Montana, Lincoln County and in the SW1/4 SE1/4, Section 2, and NW1/4 NE1/4, Section 11, T.36N., R.27W., P.M.,MT., and more particularly described as:
Commencing at the Corner of Sections 2, 3, 10, and 11, a P.K.. nail in asphalt surface; Thence along the Section Line between Sections 2 and 11, N89°37'36"E, 1,768.49 feet to a 5/8 inch diameter rebar; Thence N89°31'54"E, 147.06 feet to a 5/8 inch diameter rebar with a plastic cap marked Doyle 2516S; Thence N89°41'22"E, 111.73 feet to a set 5/8 inch diameter rebar with a plastic cap marked Hughes 7322LS; Thence N89°37'23"E, 233.50 feet to a set 5/8 inch diameter rebar with a plastic cap marked Hughes 7322LS and the TRUE POINT BEGINNING:
Thence N00°04'18"E, 241.42 feet to a set 5/8 inch diameter rebar with a plastic cap marked Hughes 7322LS; Thence N74°02'45"E, 1129.82 feet to a 5/8 inch diameter rebar; Thence S06°09'27"W, 1117.48 feet to the northerly Right-of-Way limits of "Mill Spring Road", a 5/8 inch diameter rebar with a plastic cap marked Burton 4528S; Thence S06°09'27"W, 28.79 feet to the Centerline of said road an unmarked computed point; Thence along said centerline, N73°18'25"W, 88.32 feet to an unmarked computed point and the point of curve of a non tangent curve to the left, of which the radius point lies S17°01'01"W, a radial of 4,093.18 feet; thence westerly along the arc, through a central angle of 03°02'58", 217.85 feet to an unmarked computed point; Thence along said centerline, N76°05'59"W, 316.79 feet to an unmarked computed point; Thence N00°04'18"E, 29.14 feet to the northerly Right-of-way limits of said road, a 5/8 inch diameter rebar with a plastic cap marked Burton 4528S; Thence along said limits, N77°52'39"W, 141.26 feet, a set 5/8 inch diameter rebar with a plastic cap marked Hughes 7322LS and the point of curve of a non tangent curve to the right, of which the radius point lies N11°20'39"E, a radial distance of 341.83 feet; Thence westerly along the arc, through a central angle of 19°50'10", 118.34 feet, a set 5/8 inch diameter rebar with a plastic cap marked Hughes 7322LS; Thence N57°22'52"W, 139.13 feet a set 5/8 inch diameter rebar with plastic cap marked HUGHES 7322LS; Thence leaving said Northerly limits N00°04'18"E, 222.90 feet to a set 5/8 inch diameter rebar with plastic cap marked HUGHES 7322LS and the TRUE POINT POINT OF BEGINNING, containing 19.119 acres. Subject to and together with appurtenant easements of record.

BASIS OF BEARING

The basis of bearing for this survey is S06°09'27"W, as shown on COS No. 1589, Parcel 1 between the northeasterly corner, a 5/8 inch diameter uncapped rebar and the southeasterly corner of Parcel 1, a 5/8 Inch diameter rebar with a plastic cap marked Burton 4528S.

GRAPHIC SCALE

200 0 100 200 400 800

(IN FEET)
1 inch = 200 ft.

METHOD OF SURVEY

A total station and data collector was used with closed traverse procedures to tie the previously set controlling corners by Mike Tester, June 1, 2007

LAND SURVEYOR'S CERTIFICATION

I hereby certify that I am a Registered Land Surveyor in the State of Montana, that the survey shown on this "Certificate of Survey" has been prepared under my supervision and in accordance with the Montana Code Annotated, Sections 76-3-101 through 76-3-625, and the Lincoln County Regulations adopted pursuant thereto.

Alvah F. Hughes, 7322LS Dec. 15 2008
Alvah F. Hughes, PLS 7322LS — Date

MONTANA ALVAH F. HUGHES 7322 LS REGISTERED PROFESSIONAL LAND SURVEYOR

EXAMINING LAND SURVEYOR'S CERTIFICATION

Examined this 12 day of December 2008 A.D.

Ronald A. Pearson, PLS, 9008LS

LINCOLN COUNTY TREASURER'S CERTIFICATION

I hereby certify, that all real property taxes and special assessments assessed and levied on the parcel shown hereon are paid, pursuant to Section 76-3-207(3), M.C.A.

Nancy Trotter Higgins by Jori Kinden 10-28-09
Lincoln County Treasurer, Libby, Montana — Date

LINCOLN COUNTY TREASURER SEAL

CLERK AND RECORDER'S CERTIFICATE

State of Montana, County of Lincoln, filed this 9th day of April 2010, at 2:45 o'clock P.M.

Tommy D. Lewis — Lincoln County Clerk & Recorder — by Jeannie Lewis — Deputy

CERTIFICATE OF SURVEY NO. 4009RB SHEET 1 OF 2

KSI
KOOTENAI SURVEYORS INC.
P.O. BOX 393
LIBBY, MT 59923
(406)293-4354

Sanitary Restrictions Removed Doc# 225522 P.F.# 10464 Doc# 228223

CERTIFICATE OF SURVEY

"BOUNDARY LINE ADJUSTMENT"

SE1/4 SW1/4 , SW1/4 SE1/4, SECTION 2,
NE1/4 NW1/4, NW1/4 NE1/4, SECTION 11, T.36N., R.27W., P.M.,MT.
LINCOLN COUNTY, MONTANA
FOR: TERRY WEBB DATE: JUNE 2008

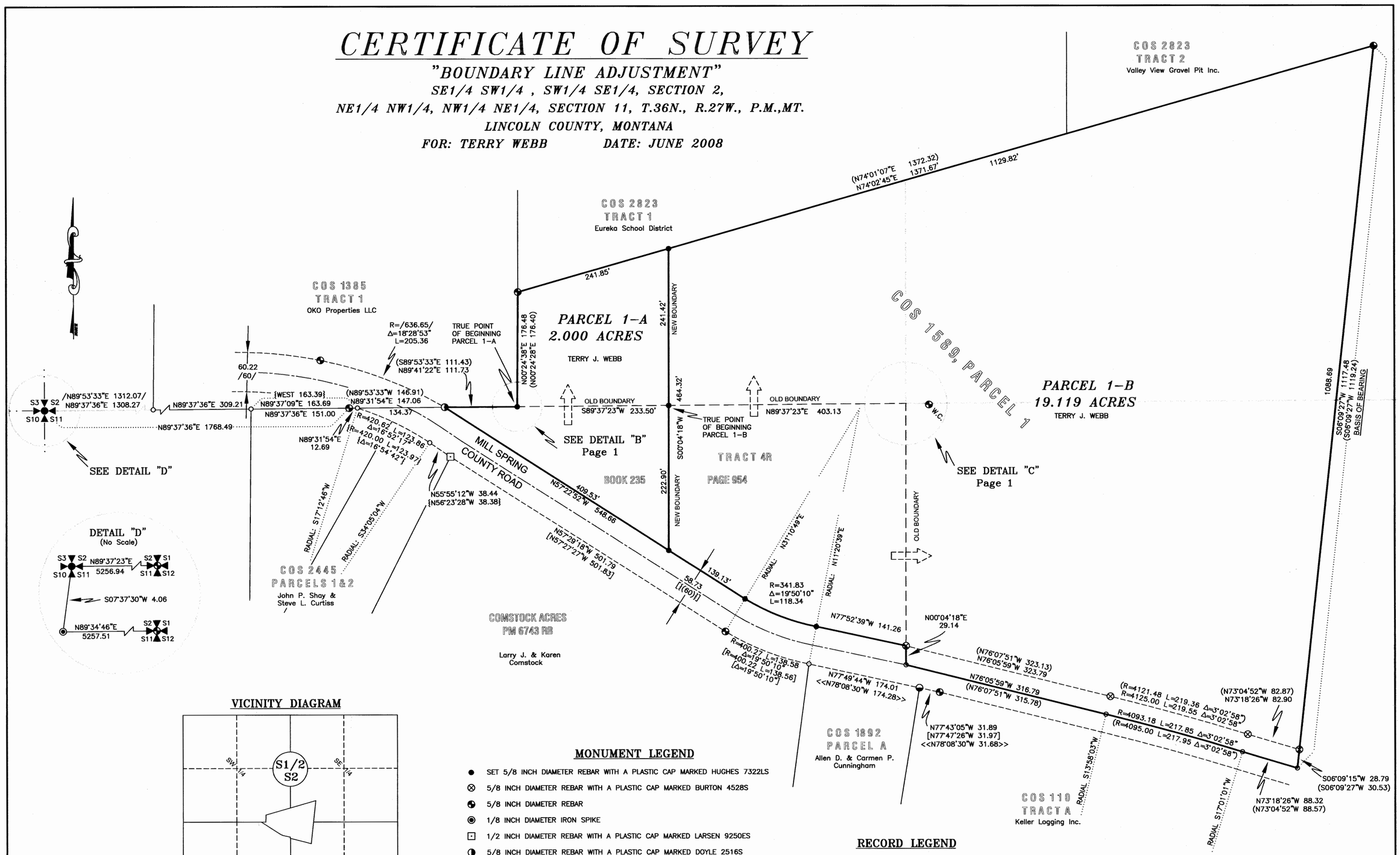

VICINITY DIAGRAM

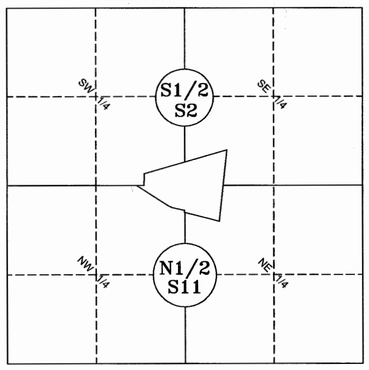

MONUMENT LEGEND

- SET 5/8 INCH DIAMETER REBAR WITH A PLASTIC CAP MARKED HUGHES 7322LS
- 5/8 INCH DIAMETER REBAR WITH A PLASTIC CAP MARKED BURTON 4528S
- 5/8 INCH DIAMETER REBAR
- 1/8 INCH DIAMETER IRON SPIKE
- 1/2 INCH DIAMETER REBAR WITH A PLASTIC CAP MARKED LARSEN 9250ES
- 5/8 INCH DIAMETER REBAR WITH A PLASTIC CAP MARKED DOYLE 2516S
- 5/8 INCH DIAMETER REBAR WITH A PLASTIC CAP MARKED MARQUARDT 7328S
- UNMARKED COMPUTED POINT
- SECTION CORNER MONUMENT, A P.K. NAIL IN ASPHALT SURFACE
- SECTION CORNER MONUMENT, A 2 1/2 INCH IRON PIPE WITH BLM BRASS CAP

RECORD LEGEND

< >	COS No. 110-RECORD
/ /	COS No. 1385-RECORD
( )	COS No. 1589-RECORD
<< >>	COS No. 1892-RECORD
{ }	COS No. 2445-RECORD
[ ]	AMENDED PLAT No. 6743-RECORD

LINETYPE LEGEND

- BOUNDARY LINES
- ADJOINING BOUNDARY LINES
- OLD BOUNDARY LINE
- SECTION LINE
- ROAD CENTERLINE
- ROAD EASEMENT LIMITS
- RADIAL, TIE, OR DIMENSION LINES
- SECTION SUBDIVISION LINE

GRAPHIC SCALE

100 0 50 100 200 400

(IN FEET)
1 inch = 100 ft.

KSI
KOOTENAI SURVEYORS INC.
P.O. BOX 393
LIBBY, MT 59923
(406)293-4354